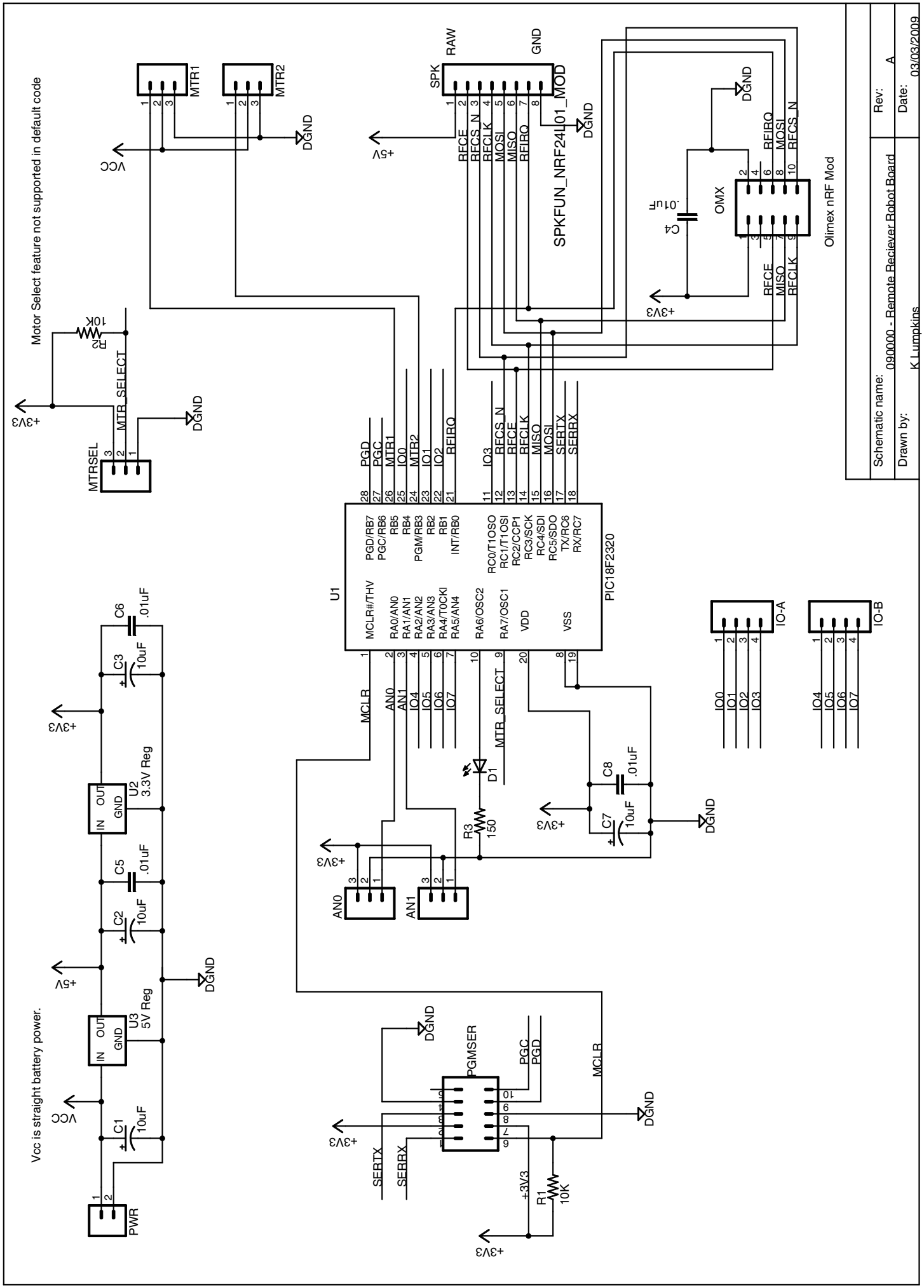
Motor Select feature not supported in default code
Vcc is straight battery power.
MTR1
MTR2
MTRSEL
MTR_SELECT
R2
10K
VCC
DGND
+5V
+3V3
SPK
RAW
GND
SPKFUN_NRF24L01_MOD
RECE
RECS_N
RECLK
MOSI
MISO
RFIRQ
OMX
Olimex nRF Mod
C4
.01uF
U1
PIC18F2320
MCLR#/THV
RA0/AN0
RA1/AN1
RA2/AN2
RA3/AN3
RA4/T0CKI
RA5/AN4
RA6/OSC2
RA7/OSC1
VDD
VSS
PGD/RB7
PGC/RB6
RB5
RB4
PGM/RB3
RB2
RB1
INT/RB0
RC0/T1OSO
RC1/T1OSI
RC2/CCP1
RC3/SCK
RC4/SDI
RC5/SDO
TX/RC6
RX/RC7
PGD
PGC
MTR1
IO0
MTR2
IO1
IO2
IO3
SERTX
SERRX
MCLR
AN0
AN1
IO4
IO5
IO6
IO7
D1
R3
150
C8
.01uF
C7
10uF
IO-A
IO-B
PGMSER
R1
10K
PWR
C1
10uF
C2
10uF
C3
10uF
C5
.01uF
C6
.01uF
U3
5V Reg
U2
3.3V Reg
IN
OUT
GND
Schematic name: 090000 - Remote Reciever Robot Board
Drawn by: K Lumpkins
Rev: A
Date: 03/03/2009